CZM
FOUNDATION EQUIPMENT

EK160

ON CAT330
(NEXT GEN)

The mast is made of special steel called “Weldox” that has a yield strength 2.8 times higher than regular ASTM A36 steel. It means that with less weight the EK160 can have better stability and displacements on the job site and easier transport handlings

EK160
Mounted on a
CAT330
(NEXT GEN)
CZM
EK160

APPLICATION

- One load machine with fast and easy set up.
- Kelly bar is transported with the machine, no auxiliary equipment necessary for set up.
- Easy conversion from versions standard and short mast by replacing:
    - Top mast assembly
    - Crowd cylinder
    - Kelly bar

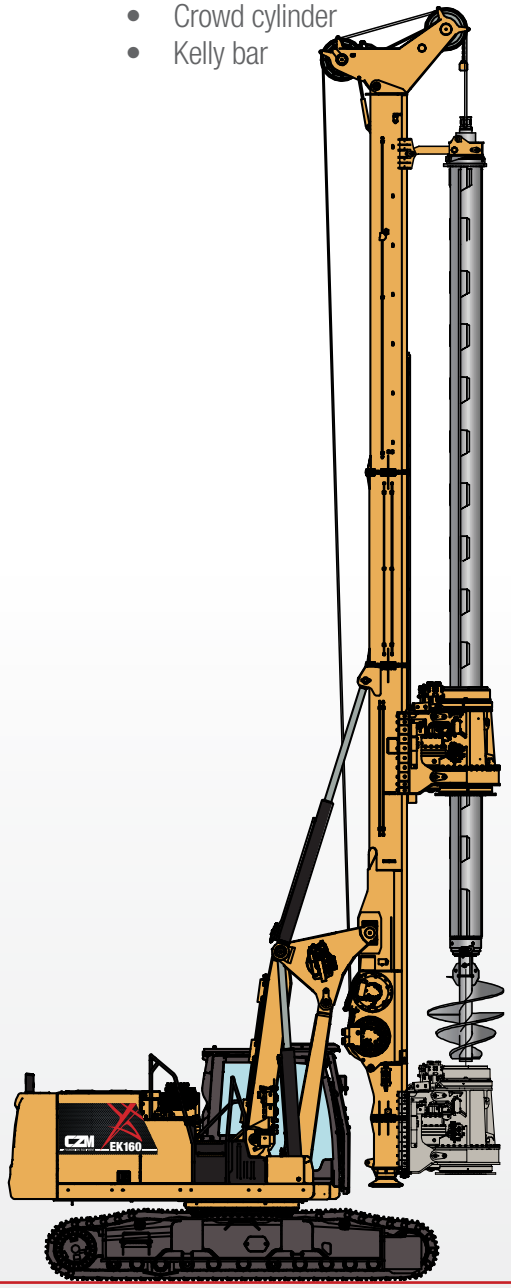

DRILLED SHAFT PILE (STANDARD VERSION)

Depth: 90ft (27m) / 120ft (37m) / 175ft (53.5m) / 200ft (61m)
Diameter (max.): with lower mast: 5ft (1,500mm)
Diameter (max.): without lower mast: 10ft (3,050mm)

STANDARD FEATURES

CZM'S OPERATOR ASSIST TECHNOLOGY:

- Auto Gear shifting for Rotary
- Auto Gear shifting for Main winch
- Drill Lock
- Auto Crowd
- Auto Level
- Return to Center

Telematics: the machine can be monitored remotely, for faults and maintenance data.

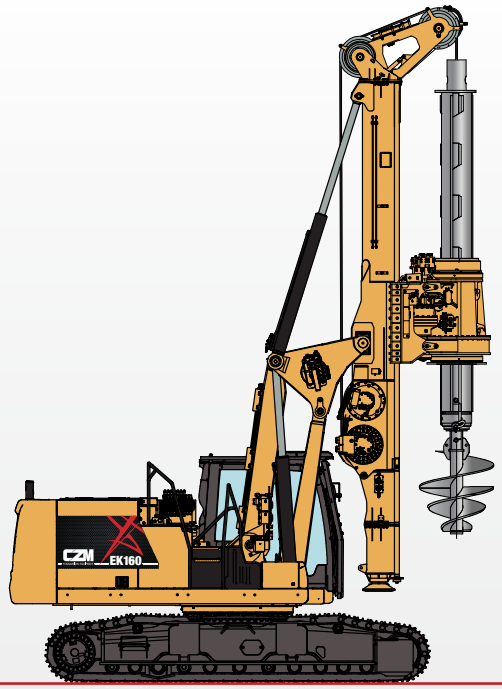

DRILLED SHAFT PILE (SHORT MAST VERSION)

Depth: 45ft (13.7m) / 53ft (16.1m)
Diameter (max.): with lower mast: 5ft (1,500mm)
Diameter (max.): without lower mast: 10ft (3,050mm)

TECHNICAL SPECIFICATIONS

KELLY BAR STANDARD MAST APPLICATION

Drilling Depth (standard - 4 elements; interlock kelly bar)	120 ft	37 m
Drilling Depth (3 elements; interlock kelly bar)	90 ft	27 m
Drilling Depth (5 elements; interlock kelly bar*)	150 ft	46 m
Drilling Depth (5 elements; interlock kelly bar*)	200 ft	61 m
Drilling Diameter with lower mast (max.)	5 ft	1,500 mm
Drilling Diameter without lower mast (max.)	10 ft	3,050 mm

***With reduced torque**

KELLY BAR SHORT MAST APPLICATION

Drilling Depth (standard - 4 elements; interlock kelly bar)	45 ft	13.7 m
Drilling Depth (4 elements; interlock kelly bar)	53 ft	16.1 m
Drilling Diameter with lower mast (max.)	5 ft	1,500 mm
Drilling Diameter without lower mast (max.)	10 ft	3,050 mm

ROTARY HEAD - RT 460 - 12 (STANDARD)

Max. torque (nominal)	134,300 lbf.ft	18,620 kgf.m
Working speed of rotation	9-34 rpm	9-34 rpm
Spin-off rotation	60-120 rpm	60-120 rpm

ROTARY HEAD - RT 460 - 14 (OPTIONAL. FOR 3 AND 4 ELEMENTS KELLY ONLY)

Max. torque (nominal)	155,100 lbf.ft	21,500 kgf.m
Working speed of rotation	8-30 rpm	8-30 rpm
Spin-off rotation	60-120 rpm	60-120 rpm

CROWD SYSTEM

Cylinder stroke - standard mast	16 ft 5 in	5,000 mm
Cylinder stroke - short mast	9 ft 6 in	2,900 mm
Cylinder push force	44,220 lbf	20,100 kgf
Cylinder push speed	56 ft/min	17 m/min
Cylinder pull force	63,580 lbf	28,900 kgf
Cylinder pull speed	39 ft/min	12 m/min

MAIN WINCH

Max. pull-force - 1st Layer (effective)	41,000 lbf	18,600 kgf
Max. pull-force - 1st Layer - 2nd Speed (effective)	33,600 lbf	15,300 kgf
Line speed - 1st Layer	258 ft/min	78 m/min
Cable diameter	-	24 mm
Drum diameter - 1st Layer	18.5 in	473 mm

AUXILIARY WINCH

Max. pull-force - 1st Layer (effective)	22,000 lbf	10,000 kgf
Line speed - 1st Layer	180 ft/min	55 m/min
Cable diameter	3/4 in	19 mm
Drum diameter - 1st Layer	16.5 in	420 mm

MAST INCLINATION

Backward	15º	15º
Forward	5º	5º
Sideways	7º / 7º	7º / 7º

DIESEL ENGINE CAT330F L TIER IV (CAT® C7.1 ACERT™)

Net Power – SAE J1349	275 hp	205 kW
Displacement	428 in3	7.01 L
Fuel Tank	125 gal	474 L

HYDRAULIC SYSTEM (CAT320E L TIER IV)

Hydraulic pressure	5,076 psi	350 bar
Flow rate (main circuit)	2x65 gal/min	2x246.5 L/min
Flow rate (auxiliary circuit)	28.5 gal/min	108 L/min
Pilot circuit pressure	595 psi	41 bar
Pilot circuit flow	6.1 gal/min	23 L/min
Hydraulic oil tank capacity	46.2 gal	175 L

UNDERCARRIAGE

Track length	17 ft	5,200 mm
Length to Center of rollers	14 ft 5 in	4,400 mm
Transport position width (retracted)	9 ft 11 in	3,000 mm
Working position width (extended)	14 ft 1 in	4,300 mm
Shoes width	28 in	700 mm
Max. drawbar pull (both tracks)	90,200 lbf	41,000 kgf
Max. travel speed	1.30 mph	2.0 km/h

TRANSPORT

Transport height	11 ft 6 in	3,500 mm
Length	63 ft 6 in	19,365 mm
Transport width	9 ft 11 in	3,000 mm
Transport weight (standard kelly 4 / 120 ft)	105,000 lb	47,800 kg
Transport weight (without kelly)	94,000 lb	43,000 kg
Transport weight (short mast-kelly 5 / 53 ft)	91,000 lb	41,400 kg

GENERAL DATA

Overall height (standard mast)	55 ft 2 in	16,810 mm
Overall height (short mast application)	30 ft	9,130 mm
Operation weight (standard mast)	105,000 lb	47,800 kg
Operation weight (short mast application)	91,000 lb	41,400

GENERAL DIMENSIONS

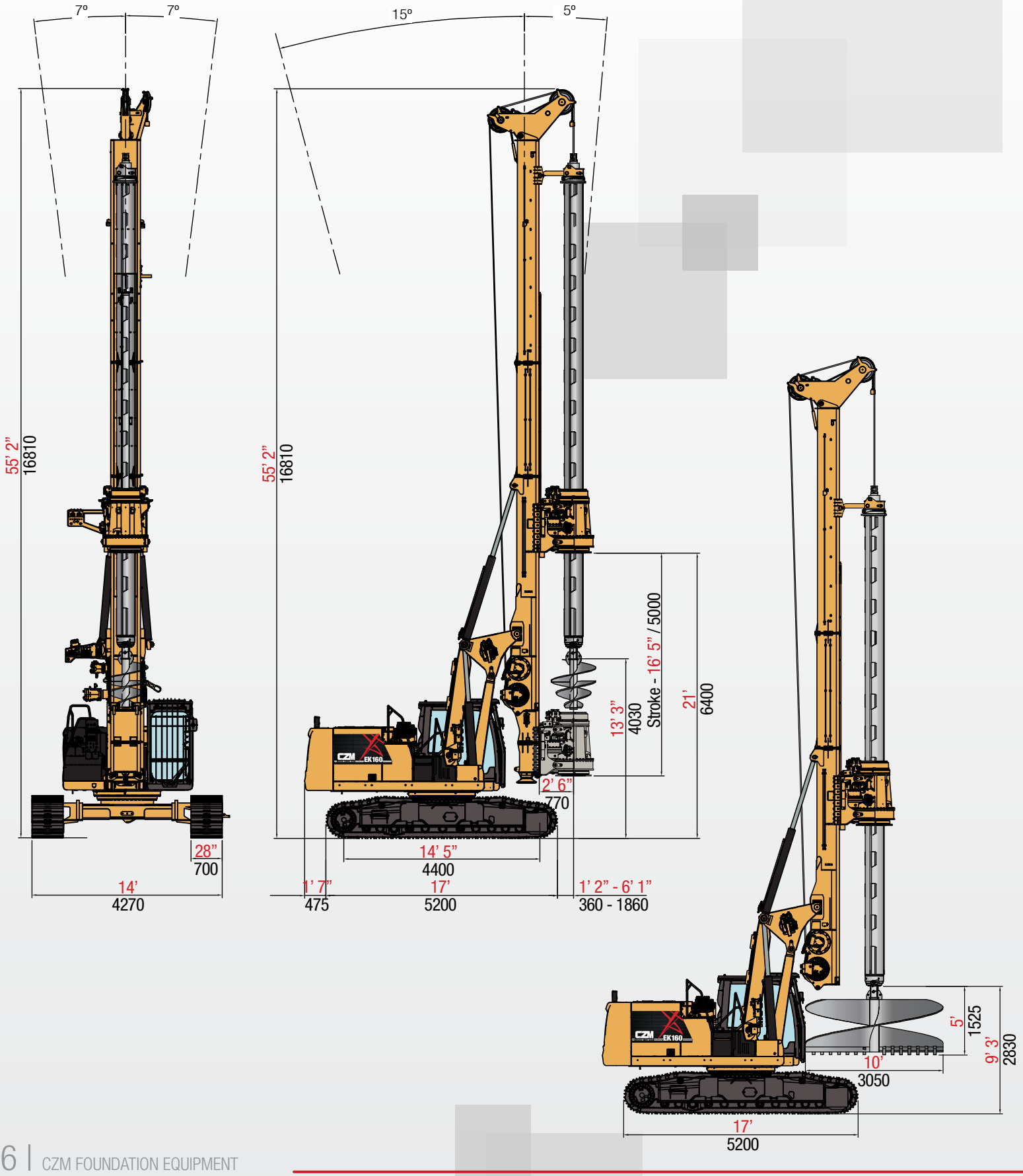

TRANSPORT POSITION GENERAL DIMENSIONS

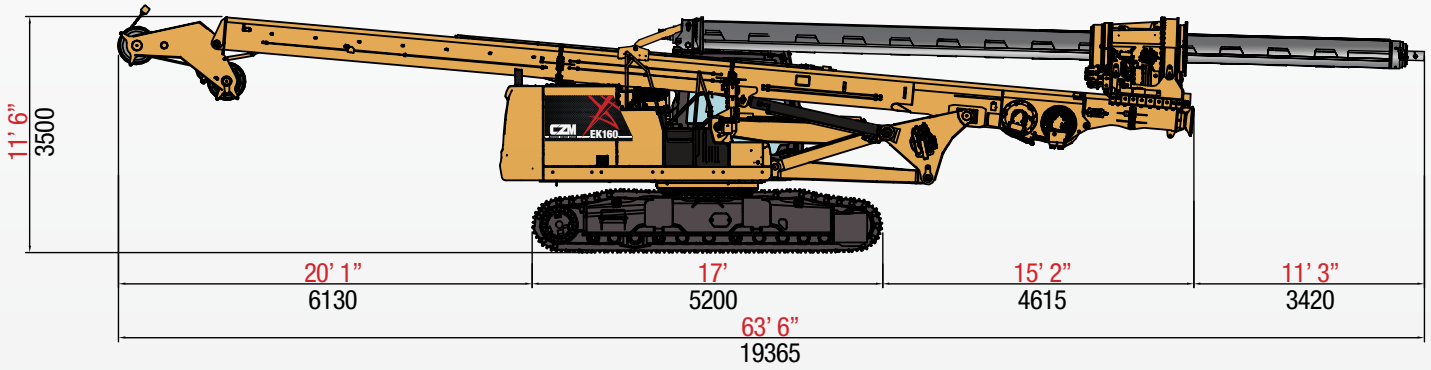

Weight: 105,000 lbs / 47,800 kg (with standard kelly bar 4/120 ft)

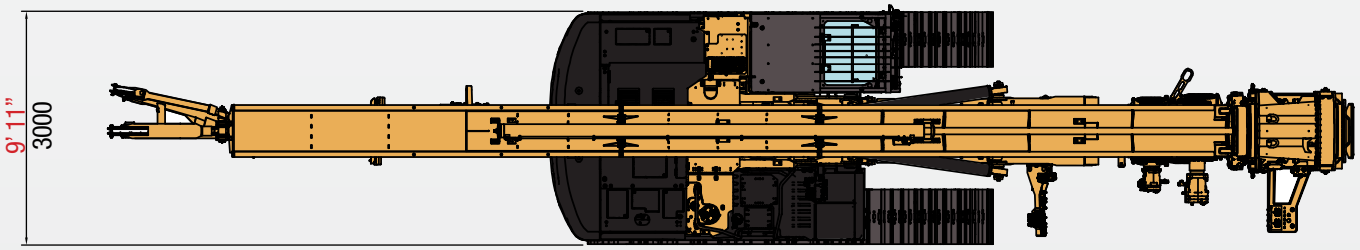

MAJOR COMPONENT WEIGHTS

Standard Kelly bar 4/120ft	10,780 lbs / 4,900 kg
Rotary	6,820 lbs / 3,100 kg
Counter weight	12,790 lbs / 5,800 kg

SHORT MAST GENERAL DIMENSIONS

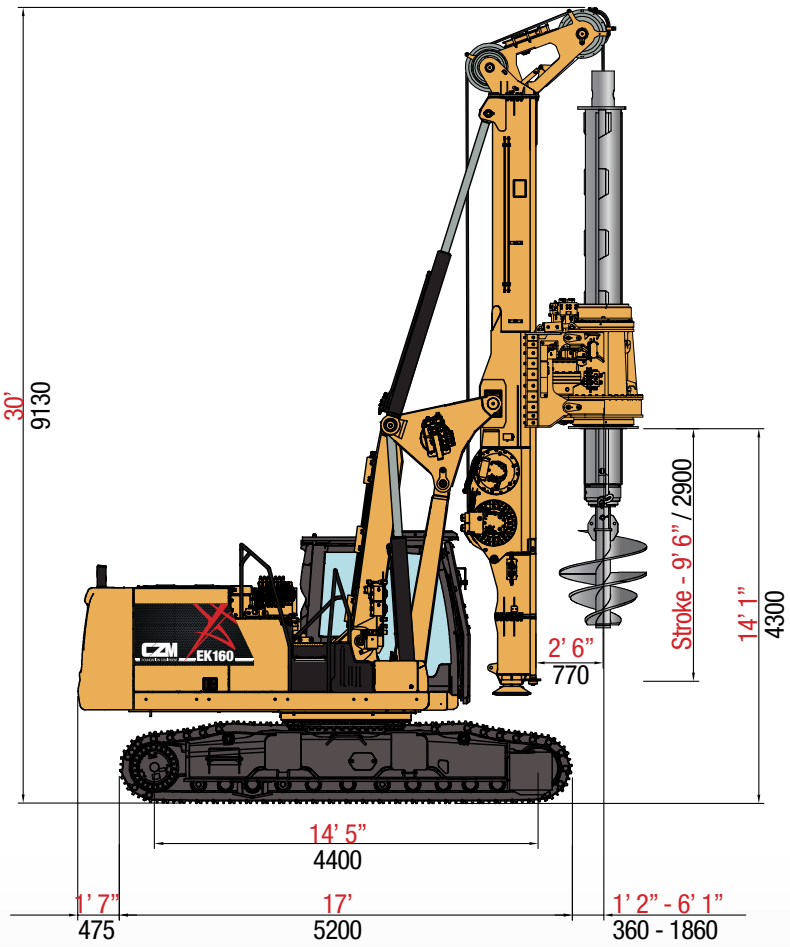

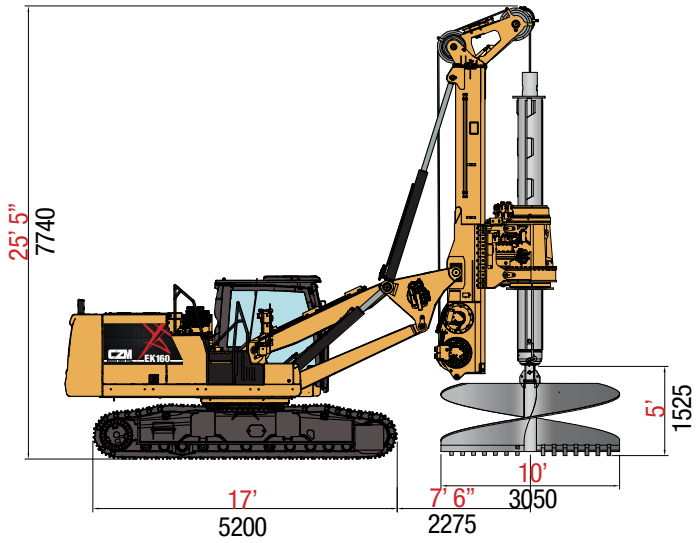

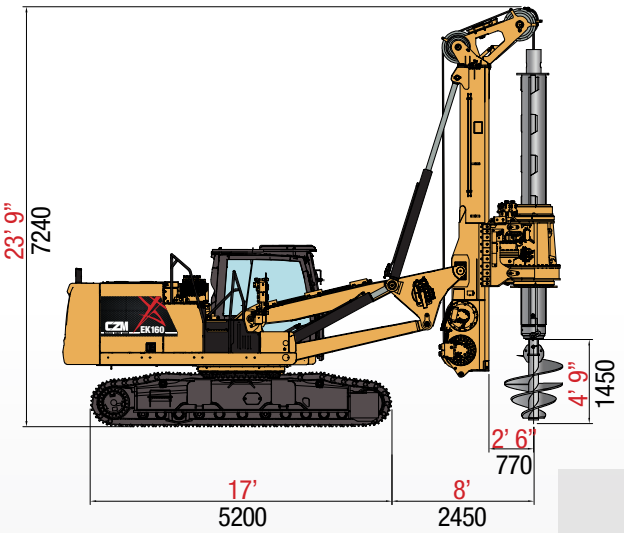

SHORT MAST TRANSPORT POSITION

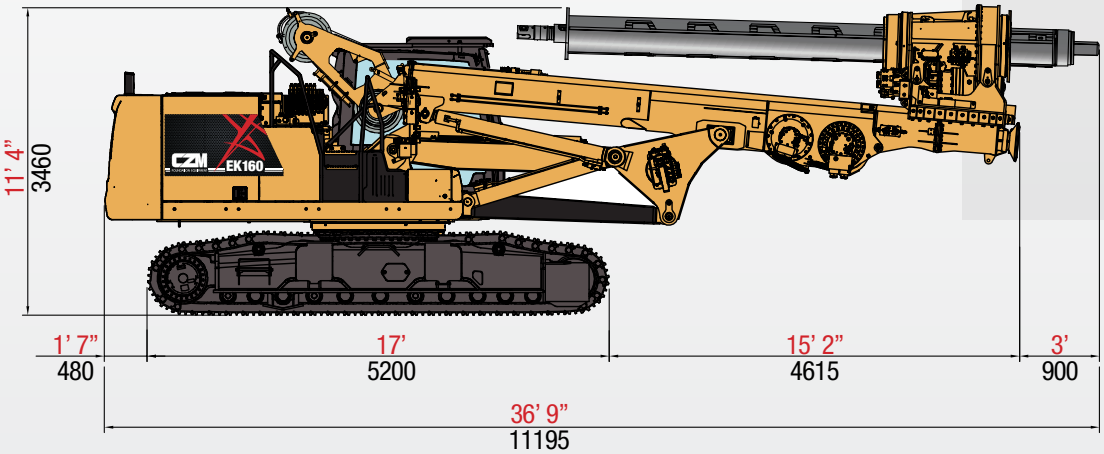

Weight: 91,000 lb / 41,350 kg

CZM
HEALTH

KELLY BAR GENERAL DIMENSIONS

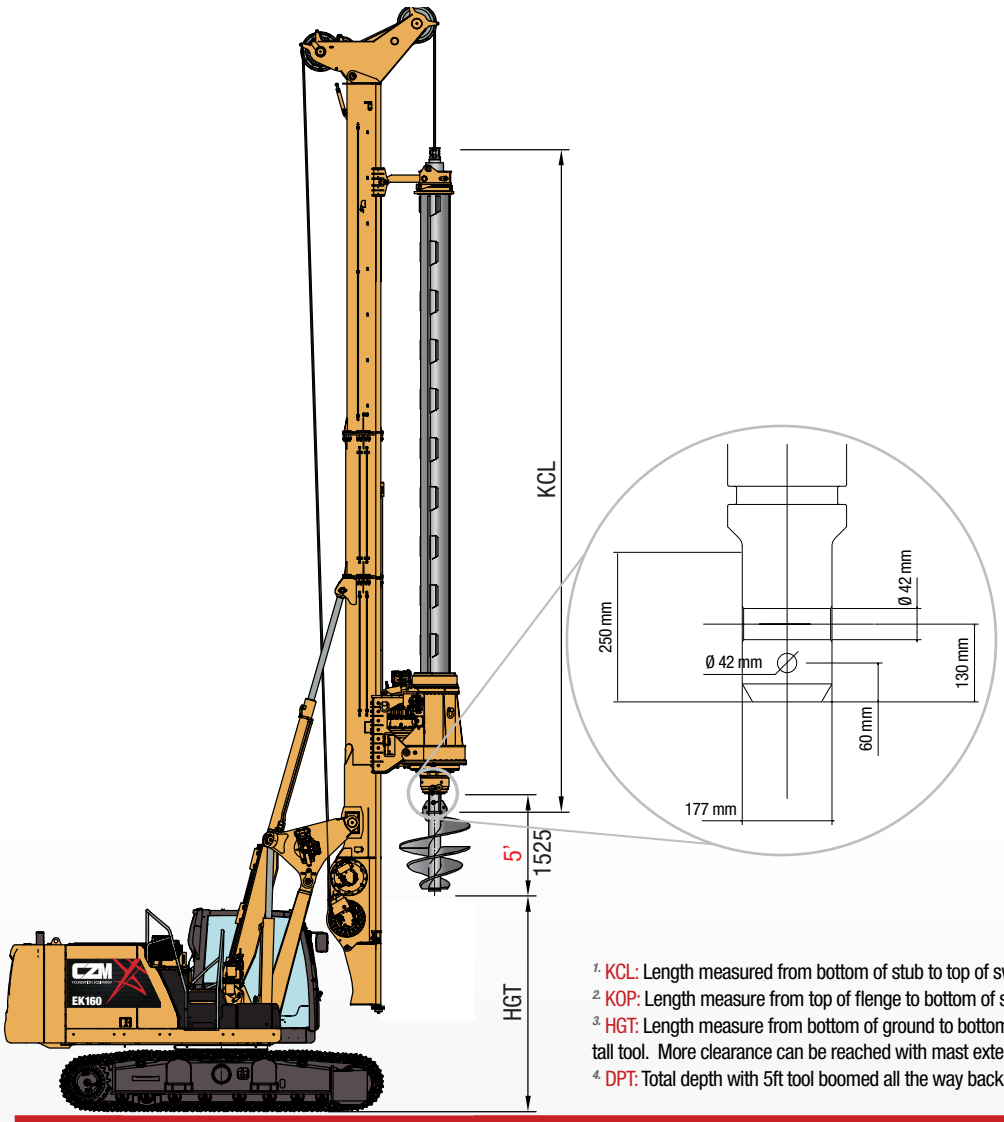

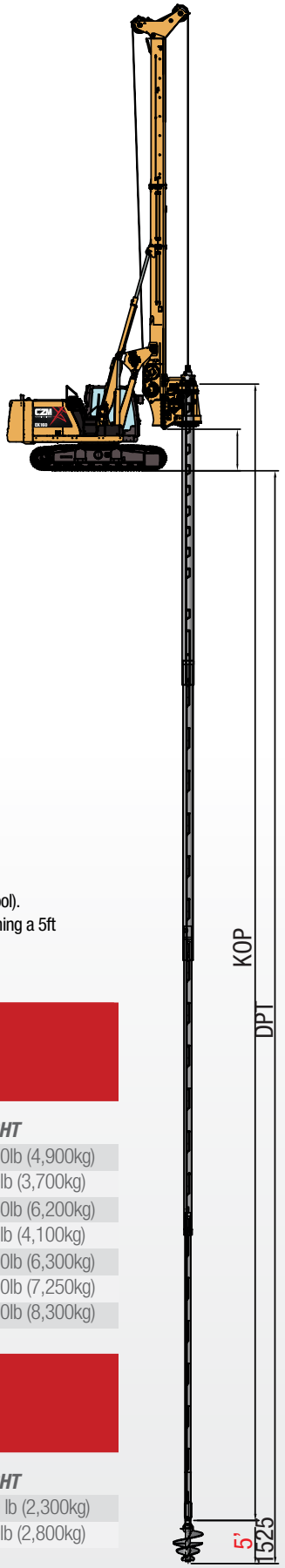

1. KCL: Length measured from bottom of stub to top of swivel.
2. KOP: Length measure from top of flenge to bottom of stub (without a tool).
3. HGT: Length measure from bottom of ground to bottom of auger assuming a 5ft tall tool. More clearance can be reached with mast extension.
4. DPT: Total depth with 5ft tool boomed all the way back.

KELLY BAR OPTIONS FOR STANDARD MAST

	NUMBER OF ELEMENTS	DEPTH - DPT[4]	TRANSPORT - KCL[1]	HGT[2]	KOP[3]	WEIGHT
Standard 4/120 Interlock	4	120ft (37m)	37ft (11.3m)	9ft 3in (2.8m)	126ft 11in (38.7m)	10,780lb (4,900kg)
3/90 Interlock	3	90ft (27m)	37ft 8in (11.4m)	9ft 3in (2.8m)	97ft 1in (22.8m)	8,150lb (3,700kg)
5/150 Interlock	5	150ft (46m)	37ft 10in (11.5m)	9ft 3in (2.8m)	157ft 5in (48m)	13,640lb (6,200kg)
4/100 Interlock	4	100ft (30.5m)	32ft 10in (10m)	14ft 3in (4.3m)	108ft 2in (33.1m)	9,000lb (4,100kg)
4/150 Interlock	4	150ft (45.7m)	43ft (13.1m)	3ft 3in (1m)	159ft (48.7m)	13,900lb (6,300kg)
5/175 Interlock	5	175ft (53.3m)	42ft 10in (13.1m)	3ft 5in (1m)	184ft 11in (56.4m)	15,950lb (7,250kg)
5/200 Interlock*	5	200ft (61m)	47ft 7in (14.5m)	3ft 8in (1m)	207ft (63.1m)	18,220lb (8,300kg)

** Needs 6ft mast extension.*

KELLY BAR OPTIONS FOR SHORT MAST

	NUMBER OF ELEMENTS	DEPTH - DPT[4]	TRANSPORT - KCL[1]	HGT[2]	KOP[3]	WEIGHT
Standard 4/45 Interlock	4	45ft (13.7m)	15ft 2in (4.6m)	5ft 2in (1.6m)	46ft 10in (14.8m)	5,070 lb (2,300kg)
4/53 Interlock	4	53ft (16.1m)	17ft 2in (5.2m)	3ft 2in (1m)	54ft 10in (17.2m)	6,070lb (2,800kg)

CZM
FOUNDATION EQUIPMENT

THE COMPANY

CZM is headquartered in Savannah, Georgia, USA. For over 40 years, we have specialized in manufacturing foundation equipment. We design and customize models for many different drilling applications including Drill shafts, CFA/cased CFA, Micropile and anchoring, piledrive and hydraulic hammers and soil improvements. We are a Caterpillar OEM (Original Equipment Manufacturer).

HEADQUARTERS
962 Interstate Centre Boulevard
Ellabell • Georgia • 31308
United States • Phone: (912) 200-7654

AFTER SALES - GEORGIA
145 East Industrial Boulevard
Pembroke • Georgia • 31321
United States • Phone: (912) 200-7654

AFTER SALES - TEXAS
2501 Blue Mound Rd. W
Haslet • Texas • 76052
United States • Phone: (817) 232-8053

WWW.CZM-US.COM

Specifications are subject to change without notice.